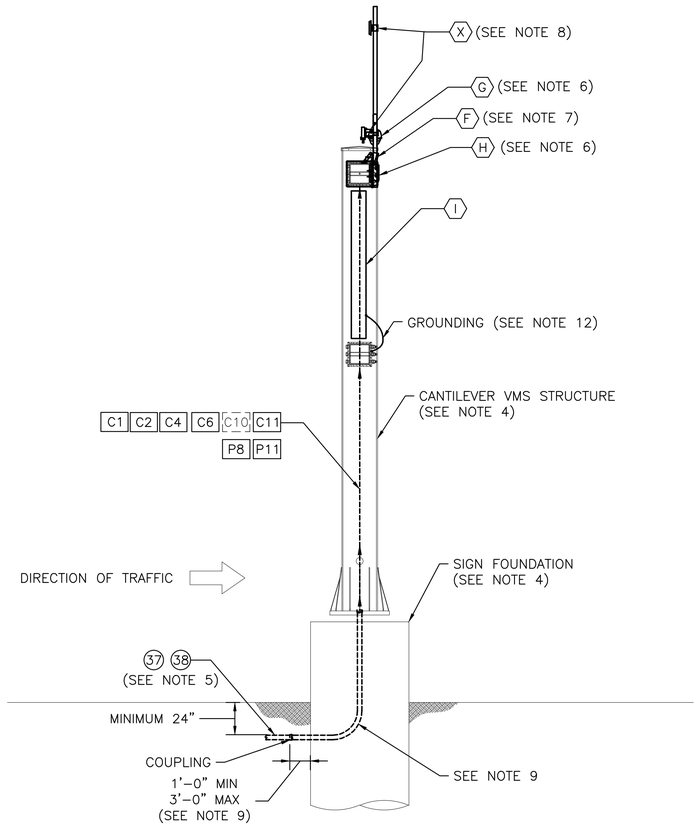
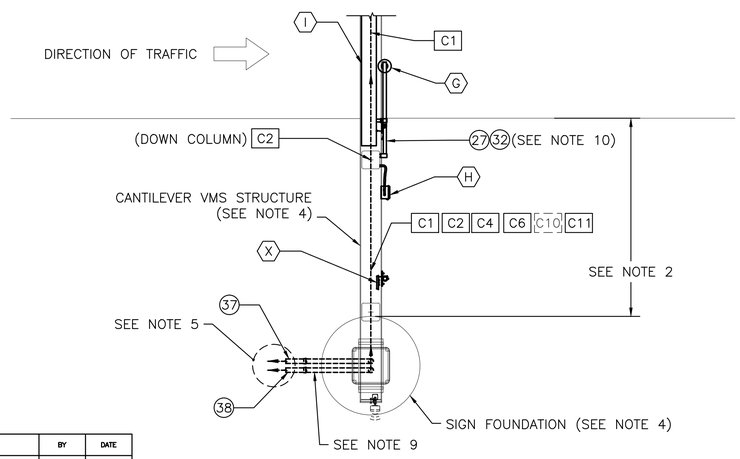


CANTILEVER – SIDE ELEVATION

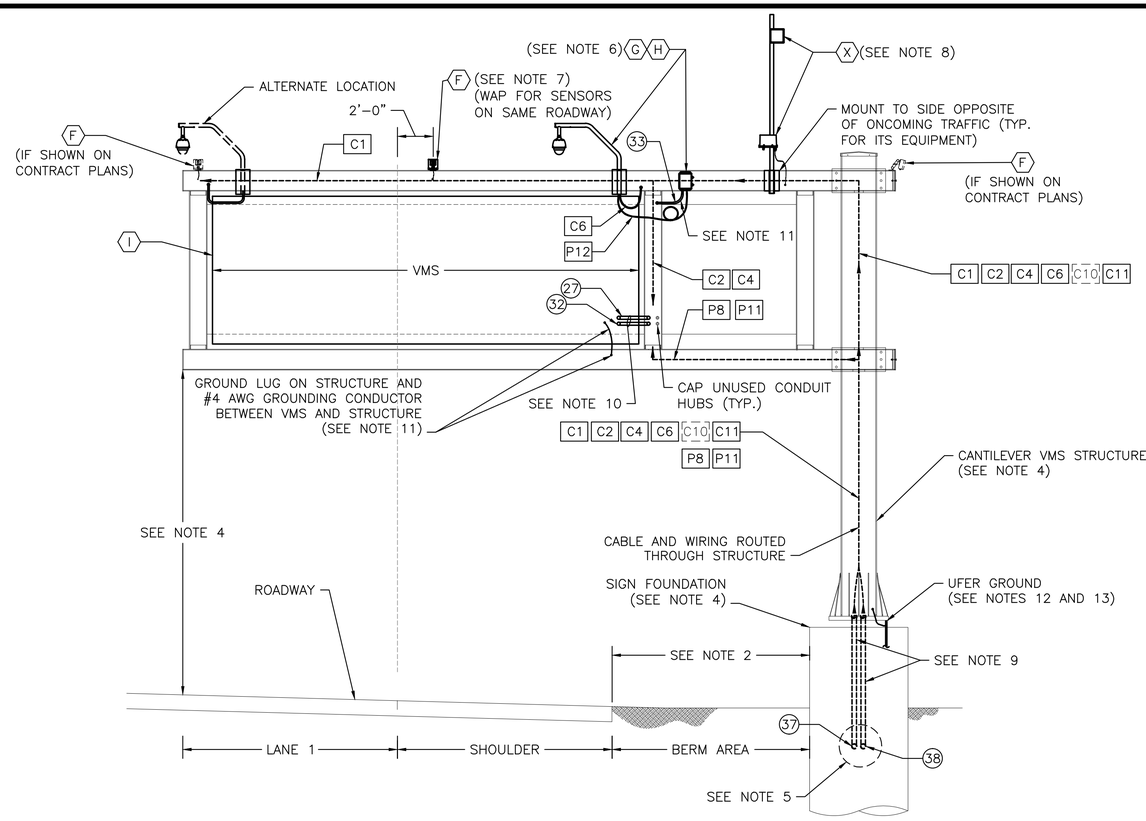
SCALE: ¼" = 1'-0"



CANTILEVER – PLAN

SCALE: ¼" = 1'-0"

*EXTERNAL CONDUITS NOT SHOWN FOR CLARITY



CANTILEVER – FRONT ELEVATION

SCALE: ¼" = 1'-0"

NOTES:

1. FOR LEGEND, ABBREVIATIONS, AND CABLE AND CONDUIT SCHEDULE SEE ITS-01 AND ITS-02.
2. SEE CONTRACT PLANS FOR LOCATION AND INSTALLATION OF GUIDE RAIL.
3. THREE (3) WIRELESS TRAFFIC SENSORS SHALL BE INSTALLED ALONG THE CENTERLINE OF EACH LANE OF TRAFFIC AS SHOWN IN THE CONTACT PLANS. SEE STANDARD DRAWING ITS-25 FOR MORE INFORMATION.
4. FOR DETAILS OF THE CANTILEVER SIGN STRUCTURE AND FOUNDATION SEE STANDARD DRAWINGS VM-11, 12, AND 13.
5. POWER AND COMMUNICATIONS CONDUITS SHALL CONTINUE AS SHOWN ON THE CONTRACT PLANS TO ITS EQUIPMENT. SEE ITS-09 FOR ADDITIONAL INFORMATION. CONDUIT(S) MAY BE MODIFIED TO ENTER THE SIGN FOUNDATION FROM AN ALTERNATE DIRECTION FROM THAT SHOWN ON THIS DETAIL WHERE DIRECTED BY THE ENGINEER OR IN THE CONTRACT PLANS.
6. THE CCTV CAMERA MOUNT AND ENCLOSURE SHALL BE MOUNTED AND INSTALLED ON THE REAR OF THE CANTILEVER STRUCTURE IN SIMILAR FASHION TO THE DETAILS SHOWN ON STANDARD DRAWING ITS-23. INSTALL CCTV IN PREFERRED LOCATION UNLESS DIRECTED BY ENGINEER TO INSTALL IN ALTERNATE LOCATION TO IMPROVE CCTV LINE OF SIGHT DUE TO SITE SPECIFIC GEOMETRICS.
7. SEE STANDARD DRAWING ITS-24 FOR INSTALLATION DETAILS OF WAP.
8. THE LOCATION OF THE END NODE RADIO ANTENNA SHALL BE AS DIRECTED BY THE AUTHORITY. SEE ITS-26 FOR INSTALLATION DETAILS OF END NODE RADIO ANTENNA.
9. CONDUITS 37 AND 38 SHALL TRANSITION FROM RNMC TO PCRMC AS THEY ENTER THE SIGN STRUCTURE FOUNDATION. GROUND CONDUIT AS REQUIRED PER NEC.
10. CONDUITS 27 AND 32 SHALL BE INSTALLED UTILIZING LB TYPE FITTINGS BETWEEN THE STRUCTURE AND VMS.
11. CONTRACTOR SHALL INSTALL GROUNDING LUG ON SIGN STRUCTURE AND GROUNDING WIRE/BOND JUMPER BETWEEN VMS/VSLS AND SIGN STRUCTURE. SEE GROUNDING DETAIL ON ITS-11.
12. RIGHT-HAND SIDE MOUNTED CANTILEVER SIGN SHOWN. INSTALLATION OF LEFT HAND SIDE MOUNTED CANTILEVER SIGN STRUCTURE SHALL BE MIRRORED EXCEPT FOR THE ENTRY OF VMS CONDUITS. VMS CONDUITS 27 AND 32 SHALL ENTER THE RIGHT HAND SIDE OF THE SIGN AS SHOWN ON THIS DRAWING.
13. UFER GROUND SHALL BE INSTALLED AT SIGN STRUCTURE PEDESTAL AS SHOWN ON STANDARD DRAWING ITS-16.
14. WHERE ANALOG CAMERA IS SPECIFIED, CONTRACTOR SHALL INSTALL FLEXIBLE CONDUIT TO HOUSE THE COMMUNICATIONS CABLE.

	BY	DATE
MADE	EMG	08/2010
TRACED	EMG	08/2010
CHECKED	MS	08/2010
SUPERVISED	ALB	08/2010

0 ½ 1 2 3 4

ORIGINAL SIZE IN INCHES

APP.	NO.	DATE	REVISION
	C	10/2013	CONFORMED DRAWING

NEW JERSEY TURNPIKE AUTHORITY

NEW JERSEY TURNPIKE

ITSS CANTILEVER DETAILS

HNTB 9 ENTIN ROAD, SUITE 202, PARSIPPANY, NJ 07054 – COA# 24GA28000700
ANTHONY L. BARTELLO
New Jersey Professional Engineer License No. GE 45842

STANDARD DRAWING ITS-07

CONTRACT NO.

SHEET NO. OF

MASTER FILE: "J:\ACAD\Approved Drawings (Working File)\NJTA\NJTA-SD ITS-07.dwg" LAST SAVED DATE: Nov 27, 2013 - 10:58 BY: MCraney
PLOTTED: Nov 27, 2013 - 10:58 BY: MCraney

ACAD FILE NAME: NJTA-SD ITS-07.dwg Layout: .Layout1