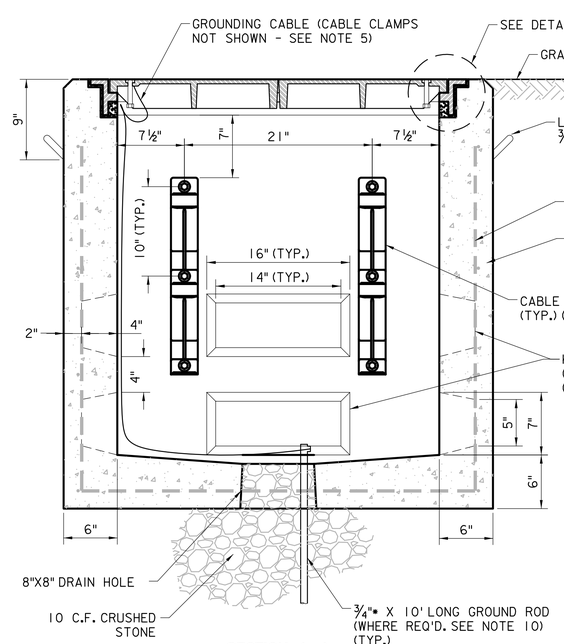

SECTION A–A

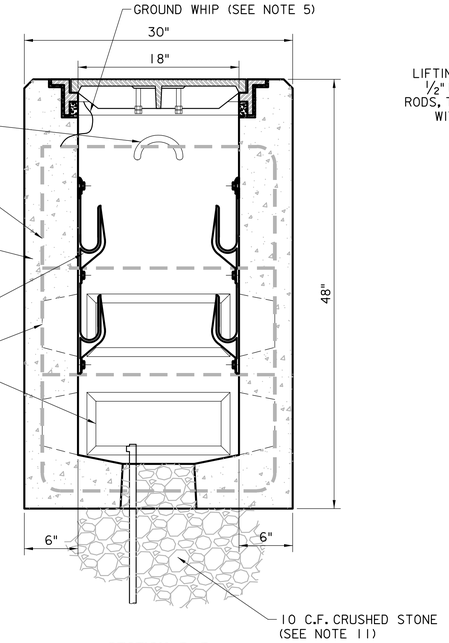

SECTION B–B

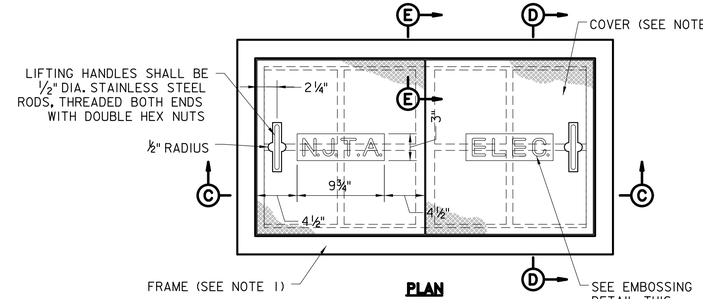

PLAN
SCALE: 1½"= 1'-0"

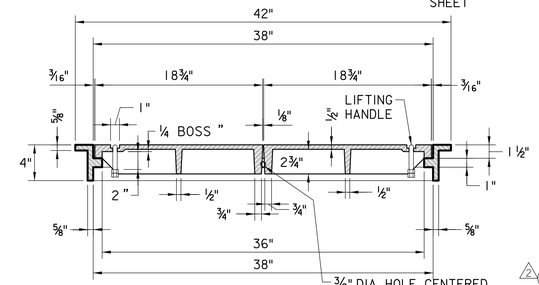

SECTION C–C
SCALE: 1½"= 1'-0"

NOTES

1. THE FRAME CASTING SHALL BE GRAY IRON ASTM A48, CLASS 30B.
2. THE COVER CASTING(S) SHALL BE DUCTILE IRON ASTM A536, GRADE 65-45-12.
3. BOTH THE FRAME AND COVER CASTINGS SHALL BE HOT DIPPED GALVANIZED IN ACCORDANCE WITH ASTM A153. THE FRAME AND COVER SHALL BE CAST WITHIN A TOLERANCE OF •1/16" OF THE DIMENSIONS SHOWN ON THIS SHEET.
4. THE COVER SHALL HAVE A LOAD RATING MATCHING OR EXCEEDING THE REQUIREMENTS OF AASHTO H20-44.
5. GROUND LUG SHALL BE SECURED TO THE FRAME USING A 3/4" STAINLESS STEEL BOLT AND LOCK WASHER AS PROVIDED BY THE FRAME MANUFACTURER. JUNCTION BOX COVER SHALL BE BONDED TO THE FRAME AND GROUND ROD VIA HIGHLY FLEXIBLE GROUND CABLE. THERE SHALL BE A MINIMUM OF 5'-0" OF SLACK BETWEEN THE TOP OF THE JUNCTION BOX AND COVER. GROUND CABLE SHALL BE ATTACHED TO THE WALL OF THE JUNCTION BOX VIA CABLE CLAMPS.
6. ALL STAINLESS STEEL HARDWARE SHALL BE TYPE 304 IN ACCORDANCE WITH ASTM A193, GRADE B8.
7. THE JUNCTION BOX MAY BE CONSTRUCTED WITH EITHER KNOCKOUTS SIZED AS SHOWN ON THIS SHEET OR WITH INDIVIDUAL CONDUIT KNOCKOUTS. IF MANUFACTURED WITH INDIVIDUAL CONDUIT KNOCKOUTS, A MINIMUM OF TEN (10) KNOCKOUTS SHALL BE AVAILABLE, DIVIDED AMONG THE FOUR WALLS OF THE JUNCTION BOX. THE CONDUIT KNOCKOUTS SHALL BE SIZED TO FIT A 3" CONDUIT AT A MINIMUM.
8. A TOTAL OF FOUR (4) CABLE RACKS SHALL BE INSTALLED PER JUNCTION BOX AND JUNCTION BOX FOUNDATION. SEE STANDARD DRAWING E-12 FOR CABLE RACK INSTALLATION DETAILS.
9. CONCRETE USED FOR THE CONSTRUCTION OF THE JUNCTION BOX SHALL BE CLASS B.
10. GROUND RODS SHALL BE INSTALLED ONLY WHERE SHOWN ON THE CONTRACT PLANS. GROUND RODS SHALL BE AS SPECIFIED IN SECTION 918 OF THE SPECIFICATIONS AND INSTALLED SUCH THAT NO MORE THAN 8" OF GROUND ROD IS EXPOSED. (2)
11. TEN (10) CUBIC FEET OF CRUSHED STONE SHALL BE PLACED BENEATH THE DRAIN OF THE JUNCTION BOX FOUNDATION. THE MINIMUM DEPTH OF THE STONE SHALL BE 12" FROM THE BOTTOM FACE OF THE JUNCTION BOX FOUNDATION.
12. JUNCTION BOXES MAY BE CONSTRUCTED WITH 4" THICK WALLS VERSUS 6" (SHOWN) WHERE APPROVED BY THE ENGINEER.
13. JUNCTION BOXES AND JUNCTION BOX FOUNDATIONS SHALL NOT BE INSTALLED IN GRASS OR PAVED AREAS WHERE THE SLOPE EXCEEDS 4:1. THE CONTRACTOR SHALL INSTALL EROSION PROTECTION MEASURES, AS DIRECTED ON THE PLANS. IN ANY CASE WHERE A JUNCTION BOX IS TO BE INSTALLED ON A SLOPE WITHOUT EROSION PROTECTION, THE CONTRACTOR SHALL NOTIFY THE ENGINEER.
14. ALL OPEN CONDUIT TERMINATIONS SHALL HAVE RODENT BLOCKING MATERIAL INSTALLED. SEE STANDARD DRAWING E-16.

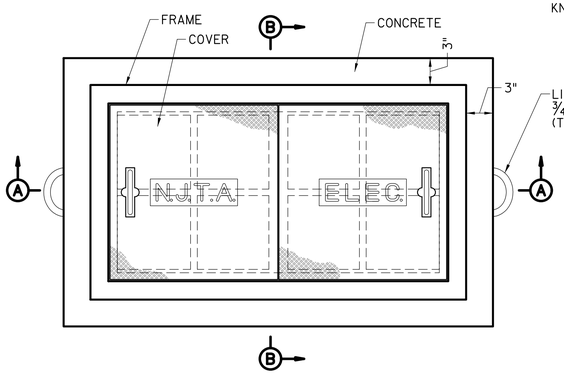

PLAN WITH COVER

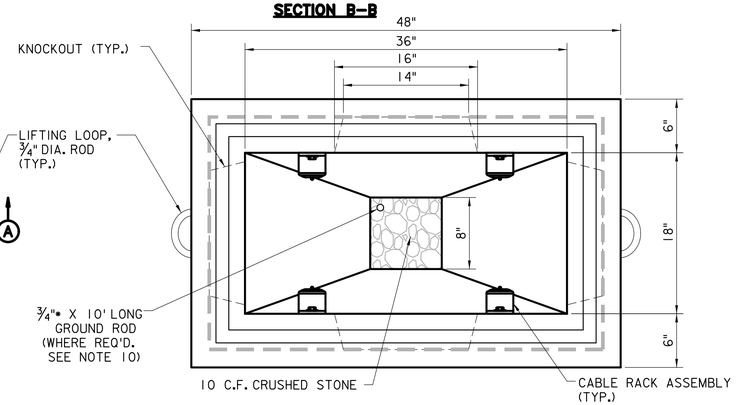

PLAN WITH COVER REMOVED

JUNCTION BOX TYPE C (18"x36") WITH FRAME AND COVER

SCALE: 1½" = 1'-0"

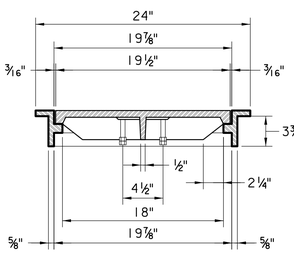

SECTION D–D
SCALE: 1½"= 1'-0"

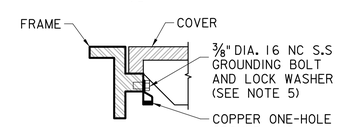

SECTION E–E
SCALE: 3" = 1'-0"

JUNCTION BOX AND JUNCTION BOX FOUNDATION FRAME AND COVER

SCALE: AS SHOWN

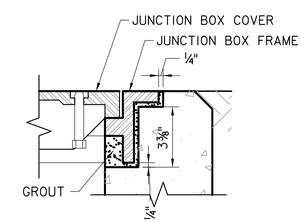

DETAIL A – FRAME GROUTING
SCALE: 1½" = 1'-0"

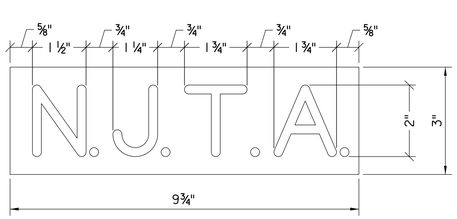

LEFT SIDE

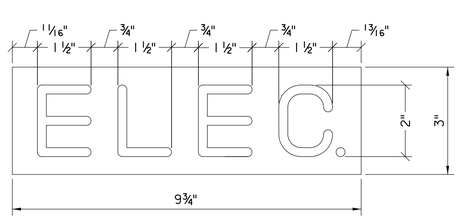

RIGHT SIDE ELECTRICAL

JUNCTION BOX COVER EMBOSSING DETAILS
SCALE: 6"=1'-0"

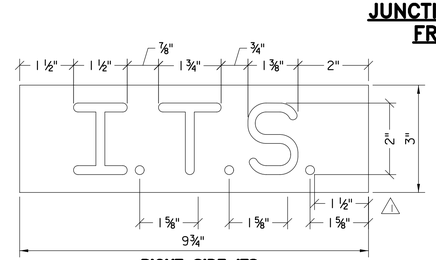

RIGHT SIDE ITS

0 1/2 1 2 3 4
ORIGINAL SIZE IN INCHES

REV.	DESCRIPTION	DATE
2	EDITED GROUND ROD NOTE	07/25
1	ADDED ITS EMBOSSING, EDIT NOTE	01/24
0	REISSUED DRAWING	09/21

NEW JERSEY TURNPIKE AUTHORITY
NEW JERSEY TURNPIKE
GARDEN STATE PARKWAY
STANDARD DRAWINGS

JUNCTION BOX TYPE C

OFFICE OF THE CHIEF ENGINEER
NEW JERSEY TURNPIKE AUTHORITY
WOODBRIDGE, NEW JERSEY

STANDARD DRAWING
E-13

CONTRACT NO. SHEET NO. OF