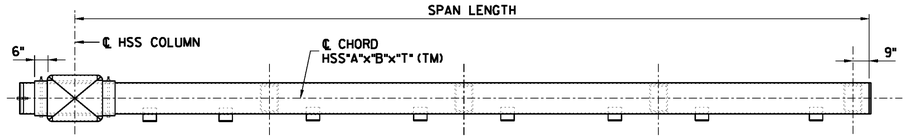

PLAN
N.T.S.

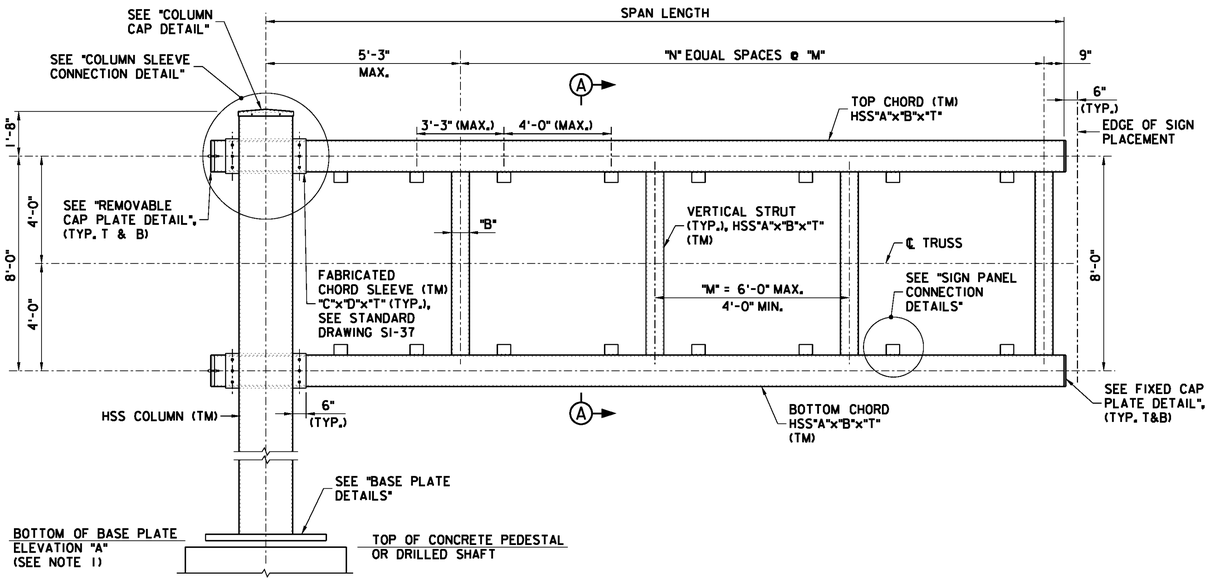

ELEVATION
N.T.S.

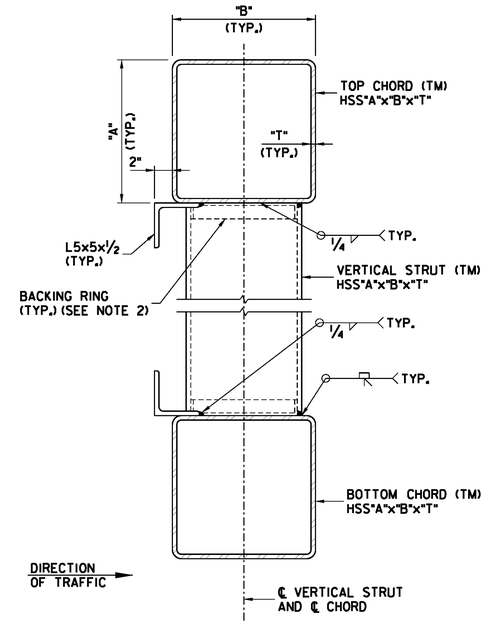

SECTION A-A
1 1/2" = 1'-0"

NOTES:

1. BOTTOM OF BASE PLATE ELEVATION "A" IS SHOWN ON SIGN STRUCTURE ELEVATIONS AND DETAILS DRAWINGS, AND SHALL BE VERIFIED BY THE CONTRACTOR TO BE A MINIMUM OF 4'-0" ABOVE THE ROADWAY CROSS SECTION.
2. FULL-PENETRATION WELDED STRUT TO CHORD CONNECTIONS AND POSTS TO BASE PLATE CONNECTIONS HAVE THE BACKING RINGS ATTACHED TO THE CHORD OR PLATE WITH A CONTINUOUS FILLET WELD AROUND THE INTERIOR FACE OF THE BACKING RING. THE BACKING RINGS SHALL BE 3/8"x2".
3. FOR CHORD, COLUMN AND VERTICAL STRUT SIZES, SEE STANDARD DRAWING SI-35.
4. FOR "SIGN PANEL CONNECTION DETAILS" SEE STANDARD DRAWING SI-42.
5. ⚠ 1 1/2" DIA. STANDARD PIPE NIPPLE SHALL BE OF APPROVED MATERIAL AND BE COMPATIBLE WITH THE MATERIAL TO WHICH IT IS WELDED. INSTALL FULLY TIGHTENED CAP ON THE NIPPLE UPON INSTALLATION.

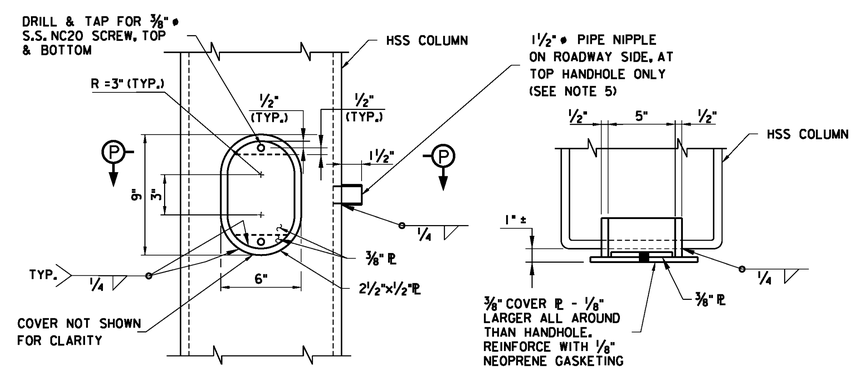

ELEVATION **SECTION P-P**

TYPICAL REINFORCED HANDHOLE AND PIPE NIPPLE DETAIL ⚠
3" = 1'-0"

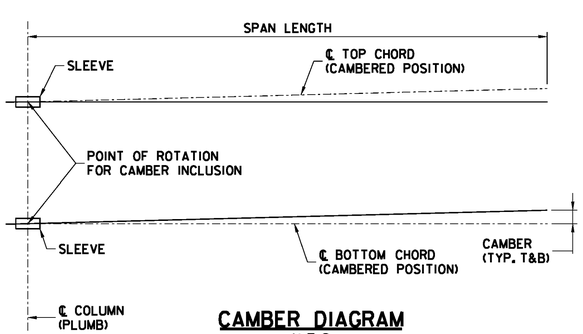

CAMBER DIAGRAM
N.T.S

CAMBER TABLE	
SIGN STRUCTURE SPAN LENGTH (FT)	CAMBER (IN)
< 38 TO 42 MAX.	2 7/8
< 32 TO ≤ 38	2 5/8
20 ≤ TO ≤ 32	2 1/4

CAMBER NOTE:

CAMBER SHALL BE OBTAINED BY ROTATING THE CHORD SLEEVES IN THE POST ABOUT THE HORIZONTAL CENTERLINE OF THE CANTILEVERED CHORDS. FIELD ERECTION OF THE CHORDS SHALL USE THE BOLTED SLEEVE CONNECTION, AS SHOWN IN THE DETAILS. THE SIGN STRUCTURE SHALL BE SHOP ASSEMBLED AND VERIFIED FOR FITMENT AND CORRECT CAMBER PRIOR TO FINAL DISASSEMBLY AND SHIPMENT TO THE CONTRACTOR. THE REQUIRED CAMBER SHALL HAVE A RESIDUAL CAMBER OF APPROXIMATELY 1" FOR FULL DEAD LOAD IN ACCORDANCE WITH SECTION 406.04 OF THE NEW JERSEY TURNPIKE AUTHORITY STANDARD SPECIFICATIONS, 6TH EDITION 2004. NO FORCE SHALL BE APPLIED IN PROVIDING CAMBER. AN ALTERNATE METHOD OF OBTAINING CAMBER MAY BE USED AS APPROVED BY THE ENGINEER.

0 1/2 1 2 3 4
ORIGINAL SIZE IN INCHES

APP.	NO.	DATE	REVISION
	1	09/12	ADDED ELECTRICAL PROVISIONS
	0	10/10	ORIGINAL DRAWING

NEW JERSEY TURNPIKE AUTHORITY
GARDEN STATE PARKWAY
VIERENDEEL CANTILEVER TYPE SIGN STRUCTURE
(SPANS FROM 20 TO 42 FEET)
DETAILS - 1

OFFICE OF THE CHIEF ENGINEER
NEW JERSEY TURNPIKE AUTHORITY
WOODBRIDGE NEW JERSEY

2010 STANDARD
DRAWING SI-36

CONTRACT NO. SHEET NO. OF

FILE NAME: $FILEL$